University of Science and Technology of Southern Philippines

Technology Promotions and Commercialization Office

DRAFTING of SPECIFICATION

Engr. Mark Lister V. Nalupa
ITSO Technical Expert
marklister.nalupa@ustp.edu.ph

P UM TM © ID

What is a Patent?

- **It is an exclusive right granted for an invention, which is a *product or a process that provides, in general, a new way of doing something, or offers a new technical solution to a problem.***

- **To get a patent, technical information about the invention must be disclosed to the public in a patent application.**

How to disclose an Invention?

- **Dilemma of researchers and inventors;**

What are the possible solutions?

- **Hire a patent attorney or patent agent to draft the specification;**
- **Learn how to draft a patent specification on your own.**

The specification serves two purposes:

- It supports the claims to allow patentability.

- It serves as a "sales" document to demonstrate the value of the invention to…

  an Examiner,

  a potential business partner/s,

  or, a judge, jury.

Requirements in writing a Specification for an invention/UM application as required under the Rules of Practice:

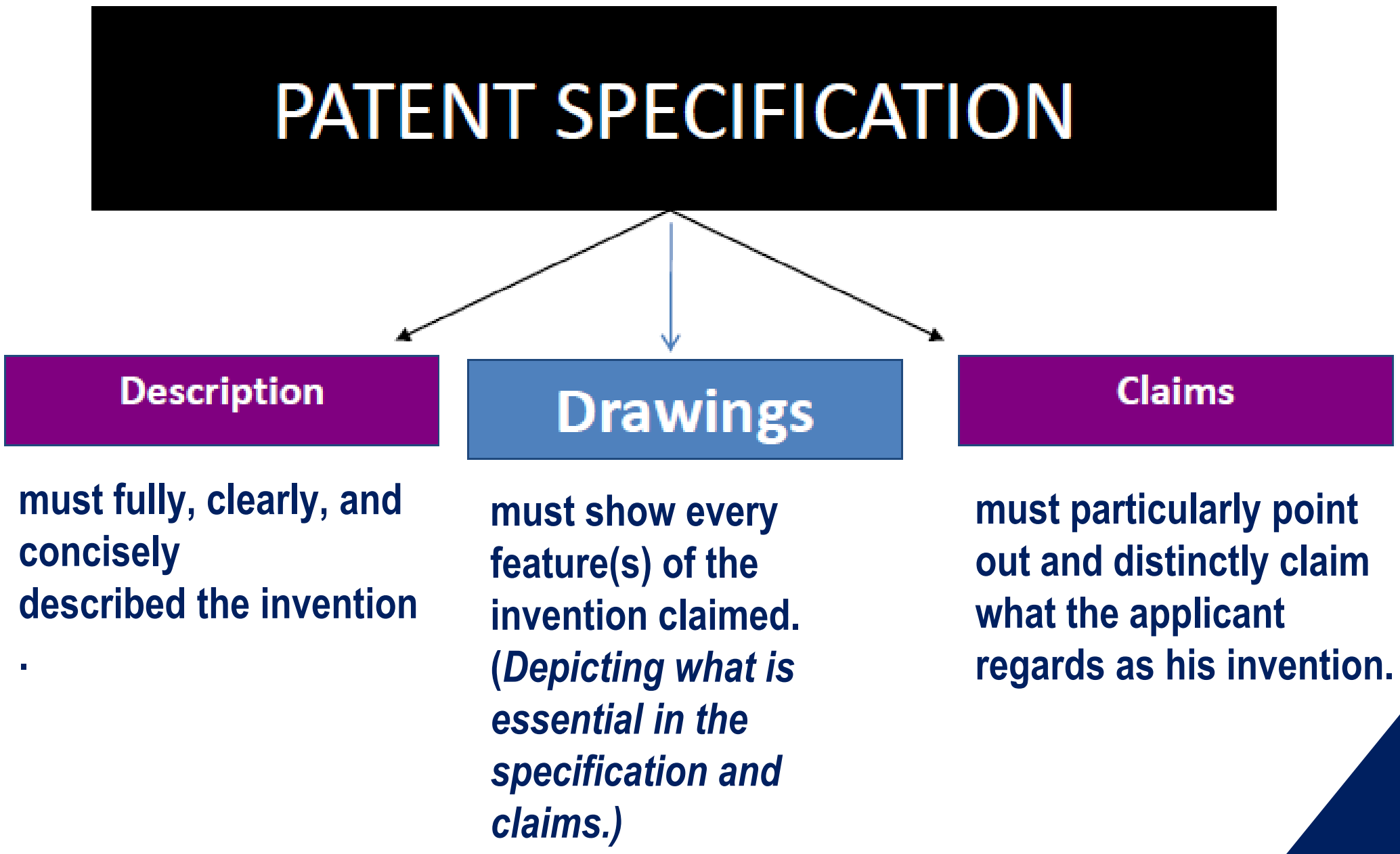

WHAT IS A COMPLETE SPECIFICATION or SUFFICIENT DISCLOSURE?

- **Article 29.1 of the TRIPS Agreement:**

  "Members shall require that an applicant for a patent shall disclose the invention in a manner sufficiently clear and complete for the invention to be carried out by a person skilled in the art [...]."

- **IP Code (R.A. 8293)**

  "Section 35. Disclosure and Description of the Invention. - 35.1. Disclosure. - The application shall disclose the invention in a manner sufficiently clear and complete for it to be carried out by a person skilled in the art."

Rule 406. The Enabling Disclosure

Rule 406. ***Test for Enabling Disclosure.*** **–**

The test for enabling disclosure is whether the person to whom it is addressed could, by following the directions therein, put the invention into practice.

Rule 406.1 Enabling Disclosure

Sufficiency of Disclosure

"In case of chemical substance and pharmaceutical subject matter, the disclosure must include one or more representative embodiments or working examples, a description of the result of the pharmacological test in the case of pharmaceutical subject matter and all compounds must include their claimed activity."

Rule 406.1- The Enabling Disclosure

Requirements regarding the description

- contents of the description shall be clear and definite and without any ambiguity, vagueness or self-contradiction.

- Any such error may result in non-compliance with, *inter alia*, the enablement requirement.

INSUFFICIENT DISCLOSURE WILL NOT CONTRIBUTE TO ADVANCEMENT OF TECHNOLOGY!!!

REQUIREMENTS FOR SPECIFICATION (Description, Claims, and Abstract)

- Typewritten
- A4 size paper
- Line spacing : 1.5 lines
- Line numbers in sets of Five (5) on the left side corner
- Margins: Top : 2 cm – 4 cm
  Left : 2.5 cm – 4 cm
  Right : 2 cm – 3 cm
  Bottom: 2 cm – 3 cm
- Page numbers at the bottom (center)
- FONT : Arial, Calibri, Times New Roman
- FONT size: 10, 11, 12

Contents of the Specification

- Title of the Invention/ Utility Model
- Abstract of the Disclosure
- Technical Field/Field of the Invention / Utility Model
- Background of the Invention/ Utility Model
- Summary of the Invention/ Utility Model
- Brief description of the several views of the drawings (*if applicable*)
- Detailed Description of the Invention/ Utility Model
- Claim(s)
- Drawings (separate page) (*if applicable*)

TITLE OF THE INVENTION

Guide

1. Short and Specific (not more than 15 words)

2. Appear as heading of the specification

3. Fancy names are not permissible

4. Must be descriptive to help explain and sell the idea

5. Serves as an aid in searching purposes

6. Does not restrict coverage of the invention

7. Indicate the scientific name (if applicable)

TITLE

❖ A PORTABLE RICE MILLING MACHINE

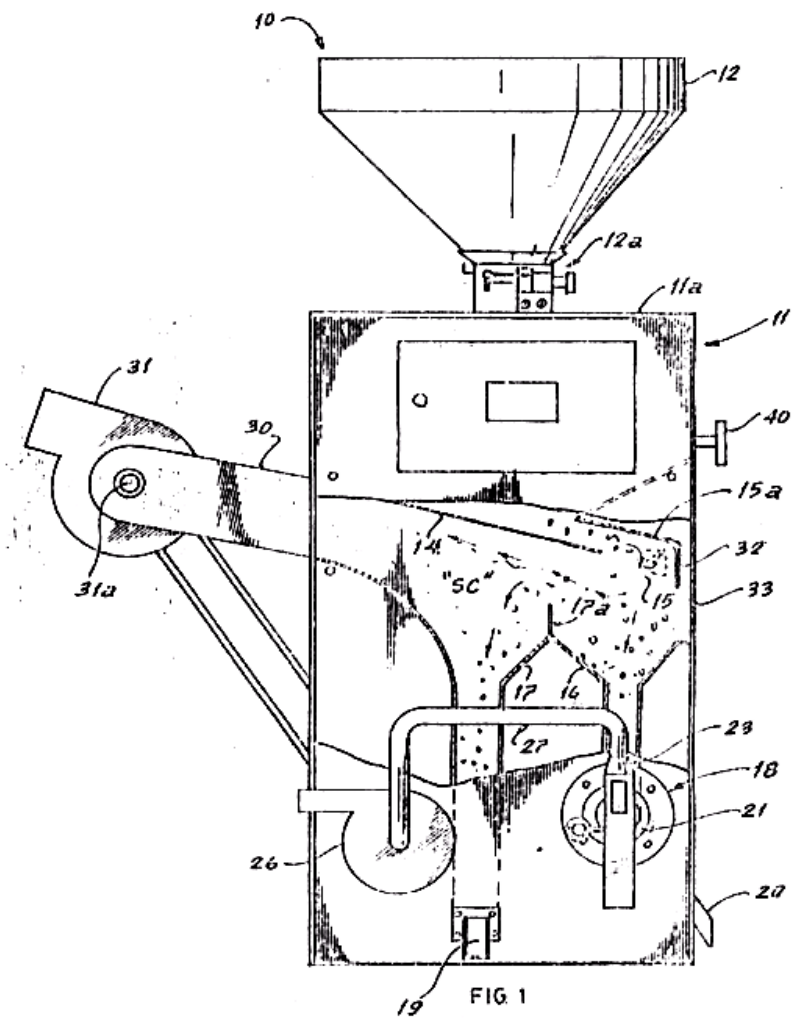

FIG. 1

❖ A ROTARY HOE

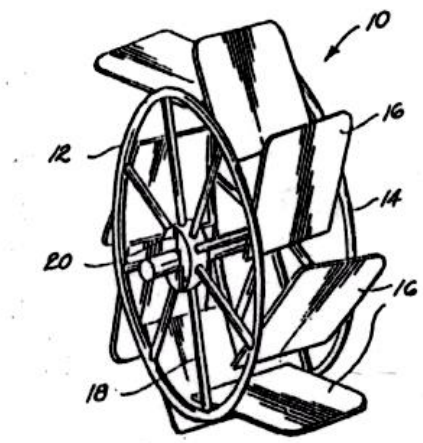

Fig. 1

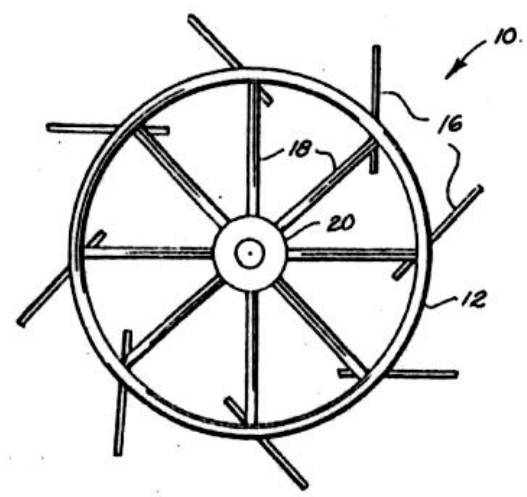

Fig. 2

TITLE

1. Fertilizer Composition

2. Combined Corn Threshing, Milling, and Sieving Apparatus

3. Distance Metering Device for Tricycle

4. Steaming and Heating Apparatus

5. Grinding Machine

6. Method for Preparing Dehydrated Potato Products

7. Vaccine Storage Container

8. Food Dehydrator

Title

- SHORT AND SPECIFIC as possible
- Fancy names not allowed (e.g. trademark)

1. “**VirgCocoSpread**”

2. “**Food spread made functional by the use of Virgin Coconut oil further comprising sugar, milk, vanilla, cocoa, coffee, and the process of preparing the food spread**”

3. **Food Spread Composition**

TITLE

<TITLE OF THE INVENTION/ UTILITY MODEL; INDICATE *Scientific name* IF APPLICABLE>

Abstract of the Disclosure

<TITLE OF THE INVENTION/ UTILITY MODEL; INDICATE *Scientific name* IF APPLICABLE>

Technical Field of the <Invention or Utility Model>

ABSTRACT OF THE DISCLOSURE

Recommended Structure

1st
- Iterate the title

2nd
- Enumerate the technical features

3rd
- Specify the manner of solving the problem

4th
- State the main use of the technology

ABSTRACT OF THE DISCLOSURE

Recommended Structure for ICT, Mechanical & Electrical

Abstract of the Disclosure

<If invention>

The present invention discloses a <title of the invention>. The <title of the invention> comprises a <technical field/features by enumerating the parts or components of the invention>. The <manner of solving the problem by discussing the steps of operation/production/process/use>. The <main use/s of the invention>.

<If utility model>

The present utility model discloses a <title of the utility model>. The <title of the utility model> comprises a <technical field/features by enumerating the parts/components/use/steps/process of utility model>. The < manner of solving the problem>. The <main use/s of the utility model>.

ABSTRACT OF THE DISCLOSURE

Recommended Structure for Food & Chemical

Abstract of the Disclosure

<If invention>

The present invention discloses a <title of the invention>. The <title of the invention> comprises a <technical field/features by enumerating the compositions of the invention>. The <manner of solving the problem by discussing the steps of production/process>. The <main use/s of the invention>.

<If utility model>

The present utility model discloses a <title of the utility model>. The <title of the utility model> comprises a <technical field/features by enumerating the compositions/process of utility model>. The <manner of solving the problem>. The <main use/s of the utility model>.

TECHNICAL FIELD

1. Statement of the field of the art to which the invention pertains

2. Statement should be directed to the subject matter

“GENERAL” statement (general field of technology)
- Agriculture
- Chemistry
- Construction Equipment

“SPECIFIC” statement (specific field or goal)

TECHNICAL FIELD

Recommended Structure

Technical Field of the <Invention or Utility Model>

The present <invention or utility model> generally relates to a <general field of the art based on IP classification> and more particularly to a <specific field of the art>.

TECHNICAL FIELD

General field of the art

•Example 1:

The present invention generally relates to an agricultural machinery and more particularly to a plowing apparatus.

Specific field of the art

•Example 2:

The present utility model generally relates to food processing devices and more particularly to a hand-held device for grating foodstuffs.

Replace these to fit with your technology

ACTIVITY 1

For 10 Minutes

Draft a Technical Field for your technology.

BACKGROUND OF THE INVENTION

Recommended Structure

1st
- Discuss the “general problem” that technology is attempting to solve

2nd
- Cite at least 3 patent literature relevant to the technology

3rd
- Enumerate the drawbacks, gaps, problems, limitations of all cited patent literature

4th
- Outline the objectives of the technology

BACKGROUND OF THE INVENTION

Recommended Structure

Background of the <Invention or Utility Model>

<One paragraph discussing the "general problem" that invention/utility model is attempting to solve>.

The patent literature includes numerous patents disclosing the <specific field of the art>.

For example, <1st patent number of the reviewed patent document > discloses a <discussion of the technical features and manner of solving the general problem >.

Another prior art <2nd patent number of the reviewed patent document >, presents a <discussion of the technical features and manner of solving the general problem >.

Lastly, <3rd patent number of the reviewed patent document> discloses a <technical features and manner of solving the general problem >.

The presented prior arts offer several notable innovations but they still leave some problems to be solved such as: <enumerate here the drawbacks, gaps, problems, limitations of all cited patent documents e.g. *hand-holdability, ease of use, effectiveness, simplicity of construction, etc.* >.

It is therefore, an object of the present <invention or utility model> to provide a/an < title of invention/utility model > for <outline here the objectives of the invention/utility model>.

ACTIVITY 2

For 30 Minutes

Draft a Background of the Invention/Utility Model for your technology.

SUMMARY OF THE INVENTION

Recommended Structure

1st

- Paraphrase the “Abstract of the Disclosure”

2nd

- Discuss the “advantages” of the technology

BACKGROUND OF THE INVENTION

Recommended Structure

Summary of the <Invention or Utility Model>

<One paragraph paraphrasing the "Abstract of the Disclosure".>

<One paragraph discussing the "advantages" of the invention/utility model>

ACTIVITY 3

For 15 Minutes

Draft a Summary of the Invention for your technology.

BRIEF DESCRIPTIONS OF DRAWINGS

Recommended Structure

1st

- Provide introductory sentences

2nd

- Provide description for the type of drawing presented in the drawing page

BRIEF DESCRIPTIONS OF DRAWINGS

Recommended Structure

Brief Descriptions of Drawings

The figures in the accompanying drawing will provide an understanding on how the present <invention or utility model> can be implemented. On such figures, identical reference characters denote similar elements.

FIG. 1 is a <type of drawing presented in the drawing page (e.g. system architecture diagram, flow diagram, hardware layout of the specific view of the invention/utility model)> of <specific field of the art>, according to some embodiments of the present <invention or utility model>.

FIG. <n> is a <type of drawing presented in the drawing page (e.g. system architecture diagram, flow diagram, hardware layout of the specific view of the invention/utility model)> of <specific field of the art>, according to some embodiments of the present <invention or utility model>.

Thank you for listening!

Engr. Mark Lister V. Nalupa
ITSO Technical Expert
marklister.nalupa@ustp.edu.ph

P UM TM © ID